Educational Outreach Program

"A Simple Method for measuring Air Pollution – suitable for use in Schools"

Tony Hansen, LBNL Engineering, Berkeley, CA

Dean Rockwell, Macomb High School

Russ Schnell, NOAA Boulder, CO

Philosophy

- Objective: teach hands-on science with

  No Digits, No Obscuring Magic, No $$

- Make demonstrative apparatus using items
  - that every student can recognize
  - that every school can afford

Air Pollution

What

- "Smoke In The Air"
- Diesel Trucks, School Buses
- Visible, obvious, smelly

Why

- Asthma *(one-third of all kids in Fresno ..)*
- Ugly: "Kills The View"

Air Pollution: method

How

- Use *an aquarium pump inside a plastic food container* and a *particle filter* to collect air-pollution particles: make a *spot* on a filter (grey, black, yellow)
- Analyze spot
- Results can be *qualitative* or *quantitative*
- **NO MAGIC !**

Put aquarium pump inside a plastic food container, exhaust outside

Exhaust outside box and seal around Exhaust Line

Cut a round hole in the container top and glue fridge magnets to the inside of the cover.

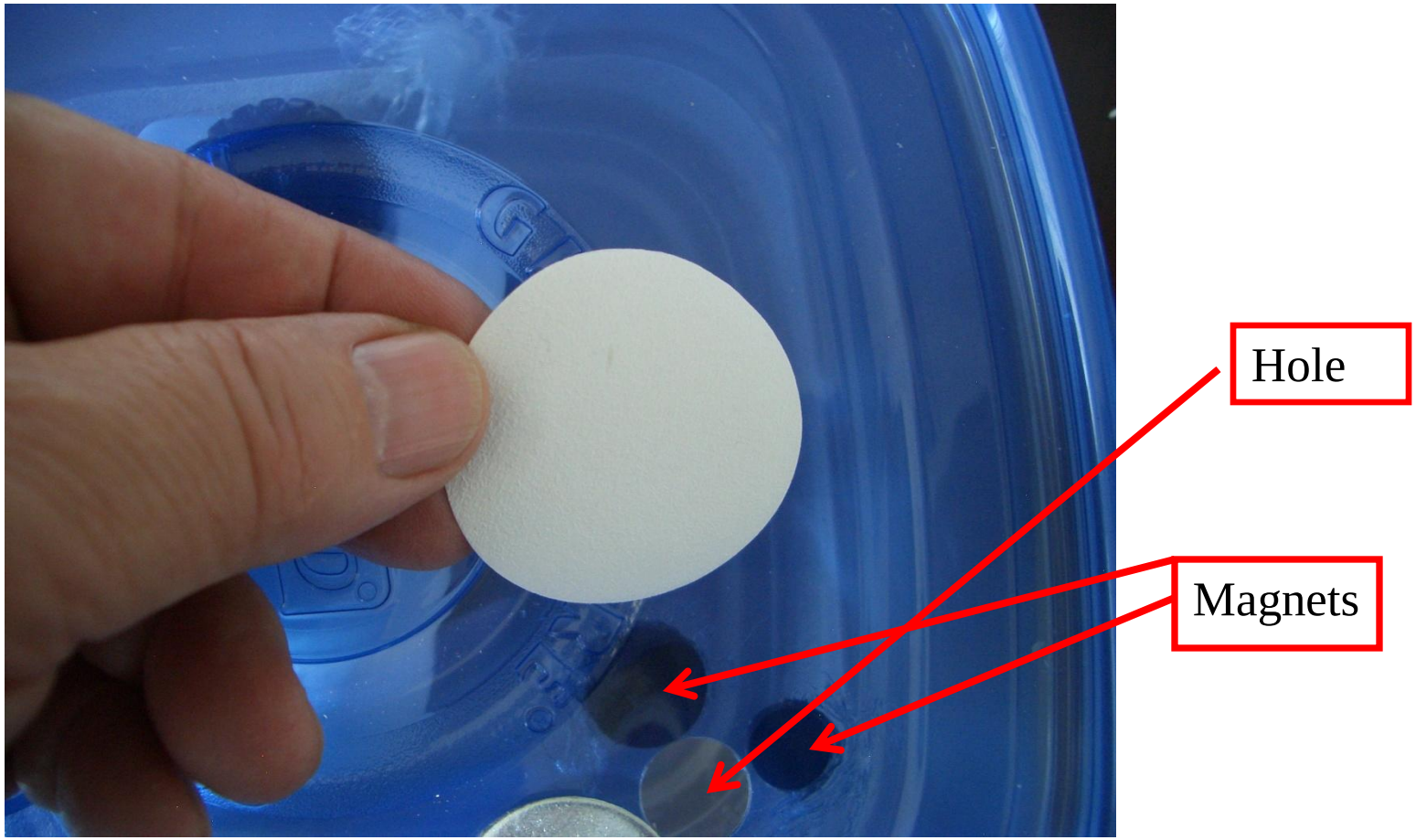

Put a quartz filter over the hole and hold it down with a steel washer that will seal tightly

Put cover onto container and ensure it seals well. Note power cord seal.

Turn on pump and air going into container will be filtered leaving black carbon and/or pollen (yellow) on filter

Remove filter after a visible spot develops (hours to days depending on the air quality).

Collection of filters exposed various lengths in various air quality situations.

Air Pollution: routine observations

- Collect air-pollution spot each day/week
- Observe visually: compare with gray scale
- Post on calendar
- Attach student observations:
  - windy ?
  - hazy ?
  - lots of traffic ?

Air Pollution: Quantitation

Gray Scale

($\mu g/cm^2$)

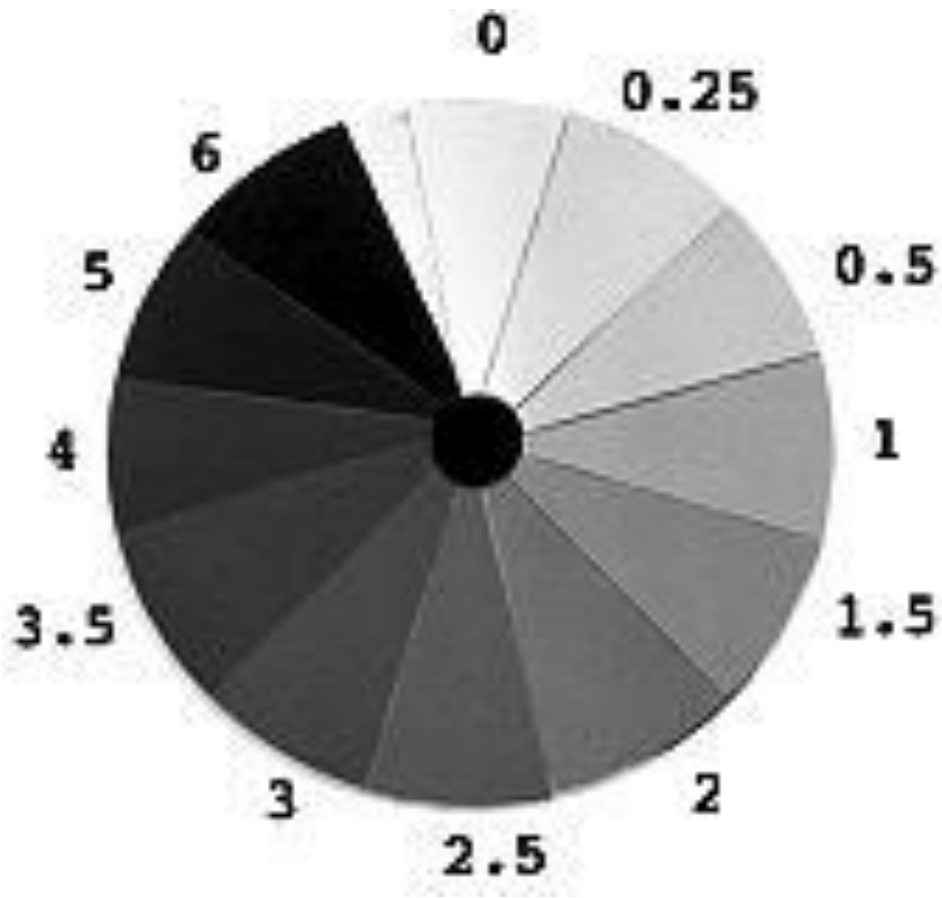

Air Pollution: Calendar

- Collect gray spot each day.
- Post on calendar with observations attached:
  - windy / hazy / traffic
  - visibility estimate
- "Air Pollution" can vary a lot.

  Why? What are the reasons?

  How can we use this information?

Air Pollution: Questions

- Questions to ask:
  - Where does the gray/black/yellow stuff come from ?
  - If it's in the air, is it OK to breathe ?
  - Why is there more on some days, and less on others ?
  - What could we do about it ?

Air Pollution: Spot *vs* Visibility

- Visibility Landmarks
  - Identify tall buildings, hills, trees at distances from 1/2 to 5 miles away and in roughly the same direction
  - Assign students as ‘observers’
  - “Can You See …. .....”
    - » clearly
    - » hazily
    - » not at all

Air Pollution: Spot *vs* Visibility

Classroom Activity:

- Sort spots against good/bad visibility days
  - *(non-quantitative 'visibility' … see later)*
- Correlation of observations?
- Causal relationship? Are *poor visibility* and *dark pollution spot* both due to the same material?

Air Pollution: Simple Statistics

Statistics and the "Right Answer"

- Pass a *spot* and the *gray scale* around class
- Each student writes their judgment on a card
- Collect all "votes", construct a histogram.

Distribution of individual assessments:

  - what does this mean ?
  - who's "right" ??

- Can we use the 'average' value as the result?

Air Pollution: Time Series Plot

Time Chart of *Purely Subjective* (!!) Data

- Construct time series chart:
  - Y-axis is Gray Scale Spot Density
  - X-axis is Date (or Day Of Week):
    (suggest running for 2 ~ 3 weeks)
  - Add weather observations as annotations on the chart

Air Pollution: Time Series Plot

What is learned from the time series plot?

- "Air Pollution" - *defined in **any** way* - is highly variable. There's no "right" answer.
- Calm weather allows it to build up.

  Windy or stormy weather blows it away.

  Where Does It Go ??
- You can learn a lot from your own observations: ***No Magic***

Air Pollution: Scatter Plot

Scatter Plot of *Purely Subjective* (!!) Data

- Based on prior observations
- Construct x-y chart:
  - Y-axis is Gray Scale Density
  - X-axis is inverse of "Visibility", defined as our best guess of the distance at which we'd have difficulty seeing a target clearly

Air Pollution: Scatter Plot

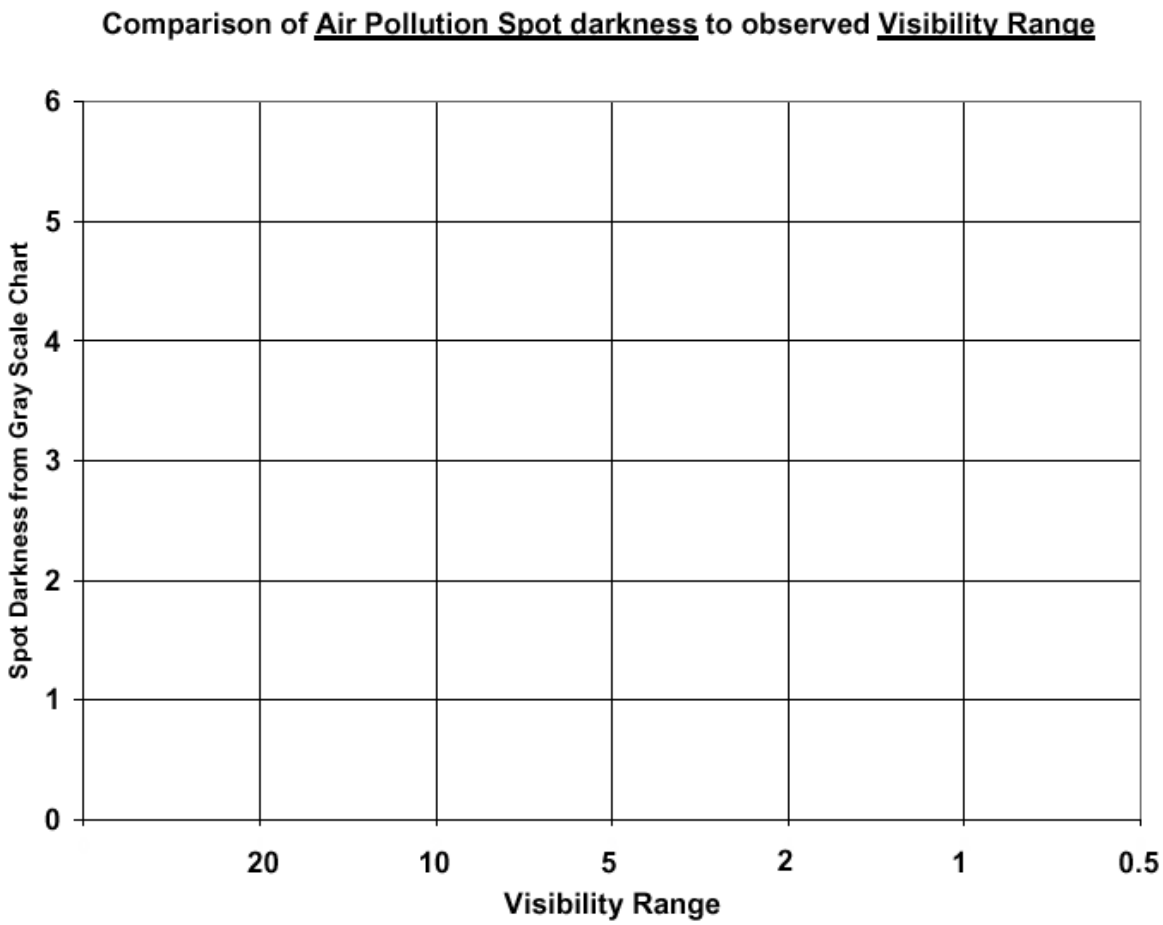

Tony Hansen, Engineering Division

Air Pollution: Scatter Plot

What is learned from the scatter plot?

- Gray material collected on the filter spot is related to reduced visibility
  - "Stuff In The Air" is *Real Stuff* - you can catch it and look at it.
- It's not a perfect straight line: Real Science often has less-than-perfect correlations.
- You CAN do it yourself: ***No Magic***

Air Pollution: Further Quantitation

This method permits a *lot* more quantitative analysis.

1. *Air Flow:*
   - Deflate large plastic bag (leaf sack), measure air volume flow rate (gallons per minute).
   - Multiply by sampling time (minutes), calculate sampled air volume, convert to cubic meters.

Air Pollution: Further Quantitation

2. *Mass of Material*:
   - Compare spot to Gray Scale, determine mass in micrograms per square cm.
   - Measure sampling spot area (cm^2).
   - Calculate collected mass (micrograms)
3. *Calculate Concentration*:
   - Mass (micrograms) ÷ Volume (cubic meters)

Air Pollution: Final Result

4. *Final Result*:
   - Typical air-pollution concentrations are in the range of *micrograms* per cubic meter.
   - This is a very small amount of stuff ! -
   - yet such a small quantity can reduce visibility and look ‘yucky’,
   - and more and more kids have *asthma*.

Air Pollution: additional material

Talk about ……..

- Diesel fumes on School Buses
- Homes where people smoke
- Lower Income Families that live close to air-pollution sources like Railroad Yards; Truck Facilities; Industrial Zones; etc.

END

Simple Air Pollution Monitor!

Tissue paper

Mesh support in end of cup, over hole

Paper cup with circular hole

To vacuum cleaner suction

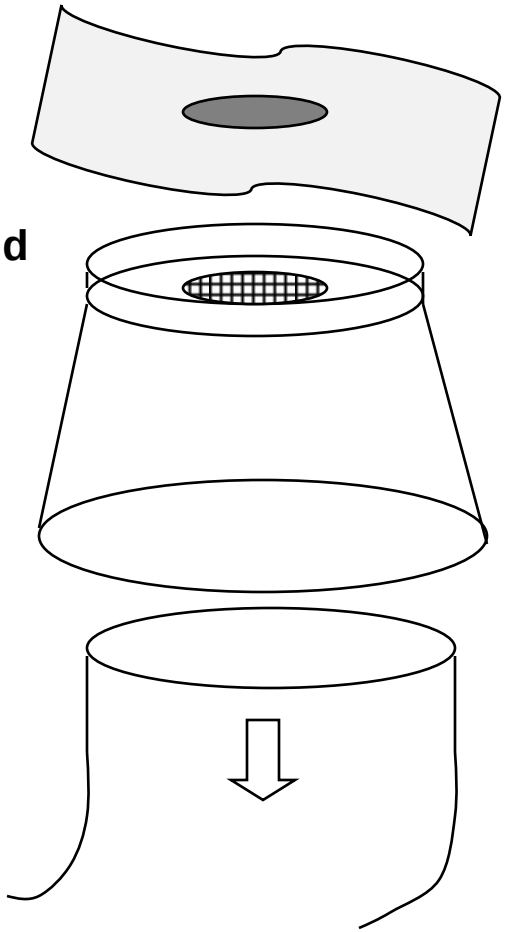

Visible spot of collected particles forms on top of tissue

Tony Hansen, Engineering Division